BEVERAGE-AIR

PROJECT: _____
ITEM # _____ QTY: _____
MODEL # _____
AIA # _____ SIS # _____
APPROVED: _____

DELI/BAKERY CASE

DELI/BAKERY CASE

Model: CDR4HC-1-B

REFRIGERATED CASE

3 Year Parts/Labor Warranty
5 Year Compressor Warranty

CABINET CONSTRUCTION

- Exterior has black powder coated galvanized steel
- Stainless steel interior with mirrored end caps
- Sliding glass, removable doors
- Curved front glass
- Full electronic control with various set points
- LED lighting with on and off switch
- Electrical outlet for scale
- Adjustable shelves for better product display
- Price tag molding standard
- Open food rated

OPTIONS & ACCESSORIES

- Dry case (add -D to refrigerated models)
- 3" Casters
- 6" Casters
- 2 3/4" Casters

REFRIGERATION SYSTEM

- Uses environmentally friendly, energy efficient R290 refrigerant, and meets all regulatory requirements for CARB, SNAP, DOE & more
- Hot gas condensate evaporator
- Hot gas defrost system
- Maintenance free condenser
- Refrigerator maintains product temperatures between 33°F to 41°F
- Direct sunlight should be avoided
- Tested to 75°F and 55% relative humidity

3779 Champion Blvd., Winston-Salem, NC 27105
888-8-9800 Fax: 336-245-6453
Beverage-Air.com Sales@bevair.com

Please verify qualifying units by visiting:
www.energystar.gov/cfs

Specifications are subject to change without prior notice.
Date Issued 9/25 Printed in U.S.A.

BEVERAGE-AIR

Deli/Bakery Case
Model: CDR4HC-1-B

PLAN VIEW

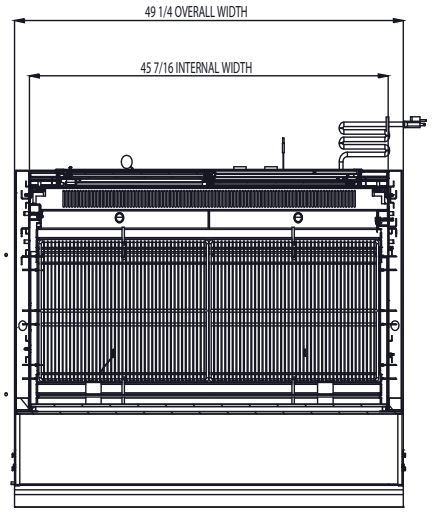

ELEVATION VIEW

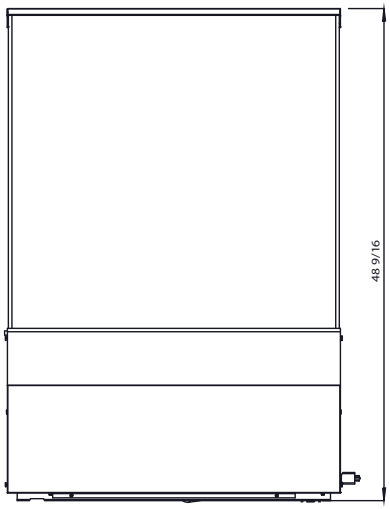

SIDE VIEW

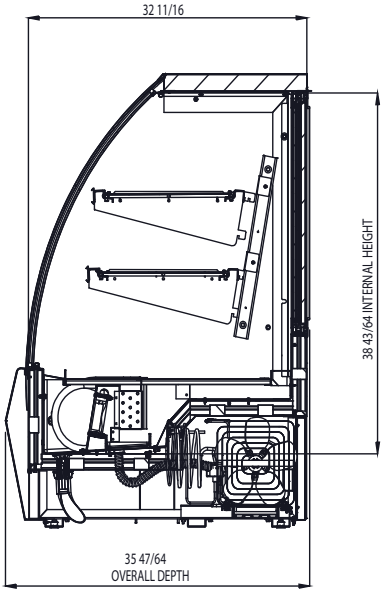

EXTERNAL DIMENSIONAL DATA	
Width Overall (in)	49 1/4”
Depth Overall (in)	35 47/64”
Height Overall (in)	48 9/16”
INTERNAL DIMENSIONAL DATA	
NET Capacity (cubic ft).	14
Internal Width Overall (in)	45 7/16”
Internal Depth Top & Middle Overall (in)	15 11/100”
Internal Depth Overall Bottom (in)	24 37/100”
Internal Height Overall (in)	38 43/64”
Number of Shelves	2

We reserve the right to change specifications and product design without notice. Such revisions do not entitle the buyer to corresponding changes, improvements, additions or replacements for previously purchased equipment. Dimensional tolerances +/- 1/4”. Metric dimensions (MM).

Required Clearance: Do not block grille (3” rear)

ELECTRICAL DATA	
Full Load Amps	4.0
Voltage	120/60/1
Nema Plug (8’ cord)	5-15P
REFRIGERATION DATA	
Horsepower	1/6
Energy Consumption	5.63 kw-hr/24 hrs
Capacity (BTU/Hr)	1180
Heat Rejection (BTU/Hr)	1770
Charge (lbs/grams/ounces)	0.176 / 80 / 2.82
SHIPPING DATA	
Gross Weight - Crated	514 lbs.
Height - Crated (in)	58”
Width - Crated (in)	55”
Depth - Crated (in)	39”

ELECTRICAL CONNECTION

115/60/1
NEMA 5-15P

Unit pre-wired at factory and include 8’ long cord and plug set.

3779 Champion Blvd., Winston-Salem, NC 27105 | 888-845-9800 | Fax: 336-245-6453 | Beverage-Air.com | Sales@bevair.com

Date Issued 9/25 | Printed in U.S.A.

WELBILT
an AI Group Company